1

DESCRIPTION

Rotary cylinders series "WR" are fit to transform the piston straightaway motion into rotative motion by means of the coupling between rack and pinion. In the standard version, rotary cylinders series "WR" can be supplied with magnetic sensors and with rotation angle adjustment.

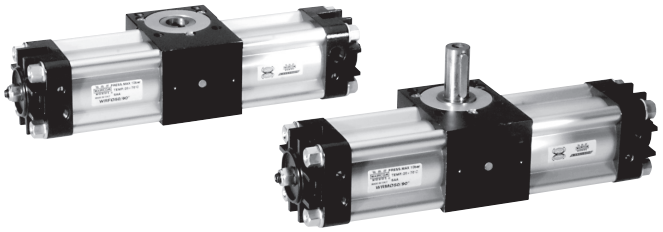

TECHNICAL DATA

Operating pressure	1 ÷ 10 bar
Working temperature	0 ÷ +80 °C (-20 °C with dry air)
Fluid	Filtered, unlubricated or continuous lubricated compressed air
Versions	Male pinion Female pinion
Bore	Ø 32, 40, 50, 63, 80, 100, 125
Port size	Ø 32 = G 1/8 Ø 40 - 50 = G 1/4 Ø 63 - 80 = G 3/8 Ø 100 - 125 = G 1/2
Standard rotation	90°, 180°, 270°; 360°
Rotation angle adjustment	± 5°

MATERIALS

End caps	Aluminium alloy, cataphoresis-treated
Cylinder barrel	Extruded profile, 20 µm anodized aluminium alloy
Central body	Anodized aluminium alloy
Pinion bearing	Ø 32: bronze-teflon bearings Ø 40 ÷ 125: ball bearings
Rack	Normalized steel, square section
Rack guide shoe	Acetal resin
Decelerators ogives	Aluminium alloy
Piston	NBR rubber block with magnet
Seals	NBR rubber

ORDER KEY

WR | | / | | S•

- Series
- Pinion type
- Bore
- Rotation angle
- Special options (supplied upon request)

P.S.: *Magnetic sensors* FM 100 - FM 157 - FM 158 (see chapter magnetic sensors from page 1.93)

• See technical data on page 0.12

PINION TYPE

M Male pinion F Female pinion

ROTATION ANGLE

90°, 180°, 270°, 360°

TECHNICAL SPECIFICATIONS

Following table shows the torques of different rotary cylinders sizes, at the pressure of 1 bar.
This value has to be multiplied for the utilization bars to set the effective torque.

Ø	32	40	50	63	80	100	125
Torque at 1 bar (Nm)	1,73	3,08	5,4	10,5	21,8	35,3	71
Max. axial load F1 with F=0 (N)	100	100	120	120	200	250	300

ORDER EXAMPLES

Cylinder Ø50, 180° rotation angle, female pinion WRF 50/180

Cylinder Ø40, 270° rotation angle, male pinion WRM 40/270

SPARE PARTS

SEALS KIT	
NBR	Ø/SG/WR

WR ROTARY CYLINDER

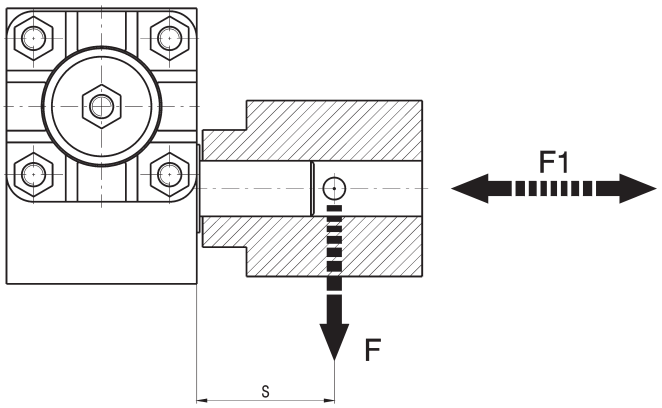

MAXIMUM PERMISSIBLE TRANSVERSE FORCE

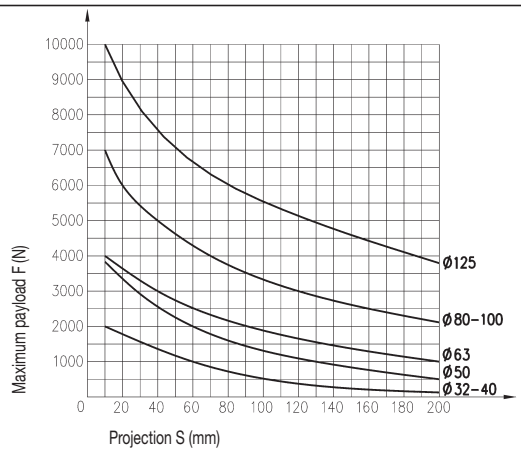

WR ROTARY CYLINDER

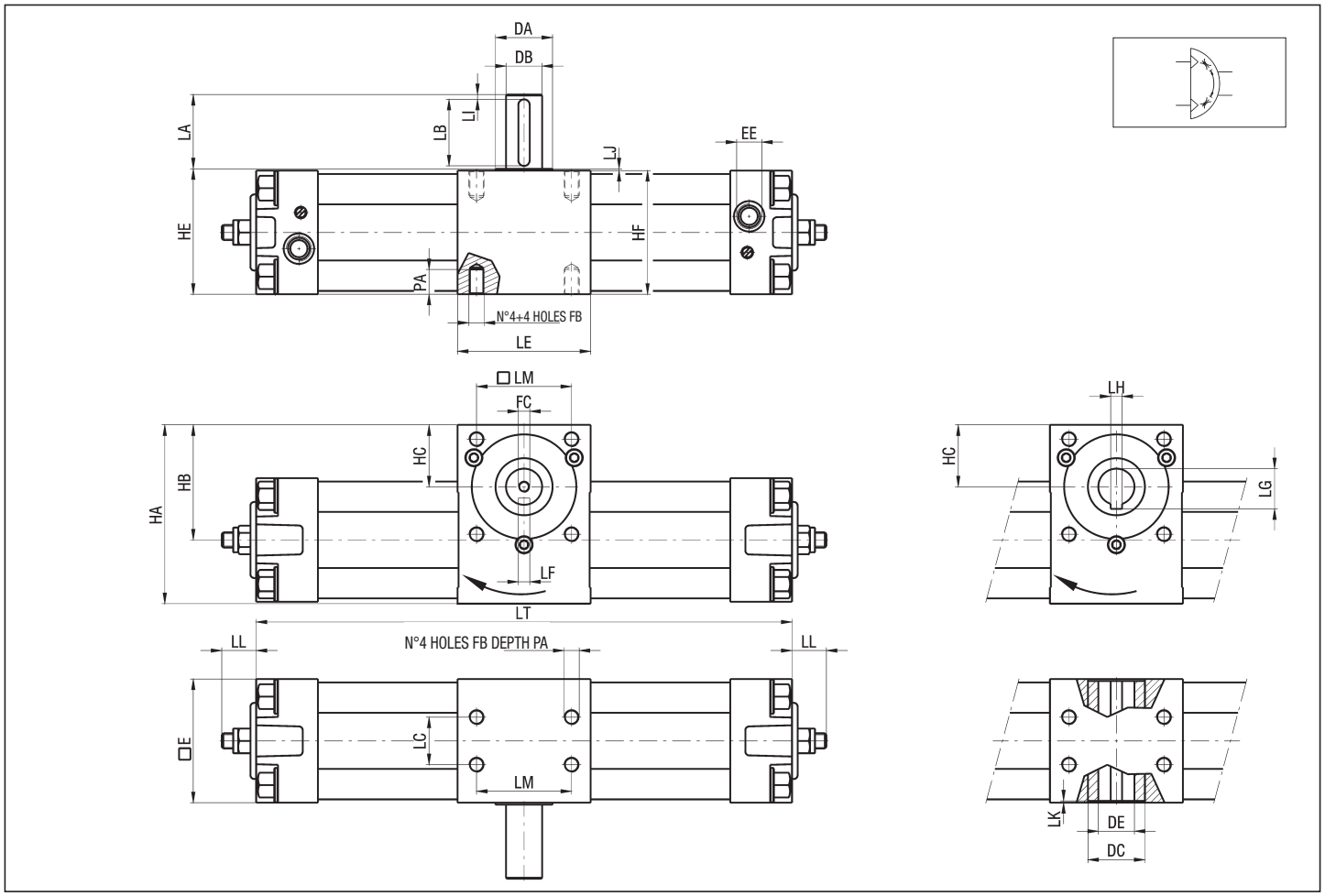

DIMENSIONS AND WEIGHTS

Ø	DA	DB *g6*	DC	DE *H7*	E	EE	FB	FC	HA	HB	HC	HE	HF	LA
32	25	14	25	14	47	G 1/8	M6	M5	71,5	46,5	25	51	50	30
40	25	14	25	14	54	G 1/4	M6	M5	82	54,5	30	61	60	30
50	30	19	30	19	65	G 1/4	M8	M6	94	60,5	32,5	66	65	40
63	30	24	30	19	75	G 3/8	M8	M8	110	70,8	37	76	75	40
80	45	28	45	24	95	G 3/8	M10	M8	142	93,5	50	100	99	50
100	50	38	50	28	114	G 1/2	M10	M10	156,5	99	54	116	115	50
125	60	38	60	28	140	G 1/2	M12	M10	188	118	60	141	140	50

Ø	LB	LC	LE	LF	LG	LH	LI	LJ	LK	LL		LM	PA
										min	*max*		
32	25	18	50	5	16,3	5	2,5	1	1	11	17	33	8
40	25	22	60	5	16,3	5	2,5	1	1	11	16	40	9
50	35	25	70	6	21,8	6	2,5	1	1	11	15	50	12
63	35	35	75	8	21,8	6	2,5	1	1	11	19	60	12
80	45	50	99	8	27,3	8	2,5	1	1	11	18	80	15
100	45	60	115	10	31,3	8	2,5	1	1	11	15	80	15
125	45	70	125	10	31,3	8	2,5	1	1	11	35	90	20

	90° ROTATION ANGLE			180° ROTATION ANGLE			270° ROTATION ANGLE			360° ROTATION ANGLE		
		PINION			PINION			PINION			PINION	
		MALE	FEMALE		MALE	FEMALE		MALE	FEMALE		MALE	FEMALE
Ø	LT	WEIGHT *(g)*	WEIGHT *(g)*	LT	WEIGHT *(g)*	WEIGHT *(g)*	LT	WEIGHT *(g)*	WEIGHT *(g)*	LT	WEIGHT *(g)*	WEIGHT *(g)*
32	227,5	1300	1200	274,5	1420	1320	321,5	1540	1440	368,5	1660	1560
40	269	2010	1900	326	2210	2900	382,5	2390	2280	439	2580	2470
50	282	3070	2840	344,5	3340	3110	407,5	3610	3380	470	3880	3650
63	348	4990	4640	422,5	5500	5170	497	6010	5700	571,5	6520	6230
80	404	9840	9220	503	10840	10230	602	11840	11240	701	12840	12250
100	428	13650	12680	534,5	14860	13870	641,5	16070	15060	748	17280	16250
125	519	23370	22220	651	25720	24520	783	28070	26820	915	30420	29120